0 601 B30 003

Stand ~~03-04~~
Issue 06-03-21

Fig./Abb. 1

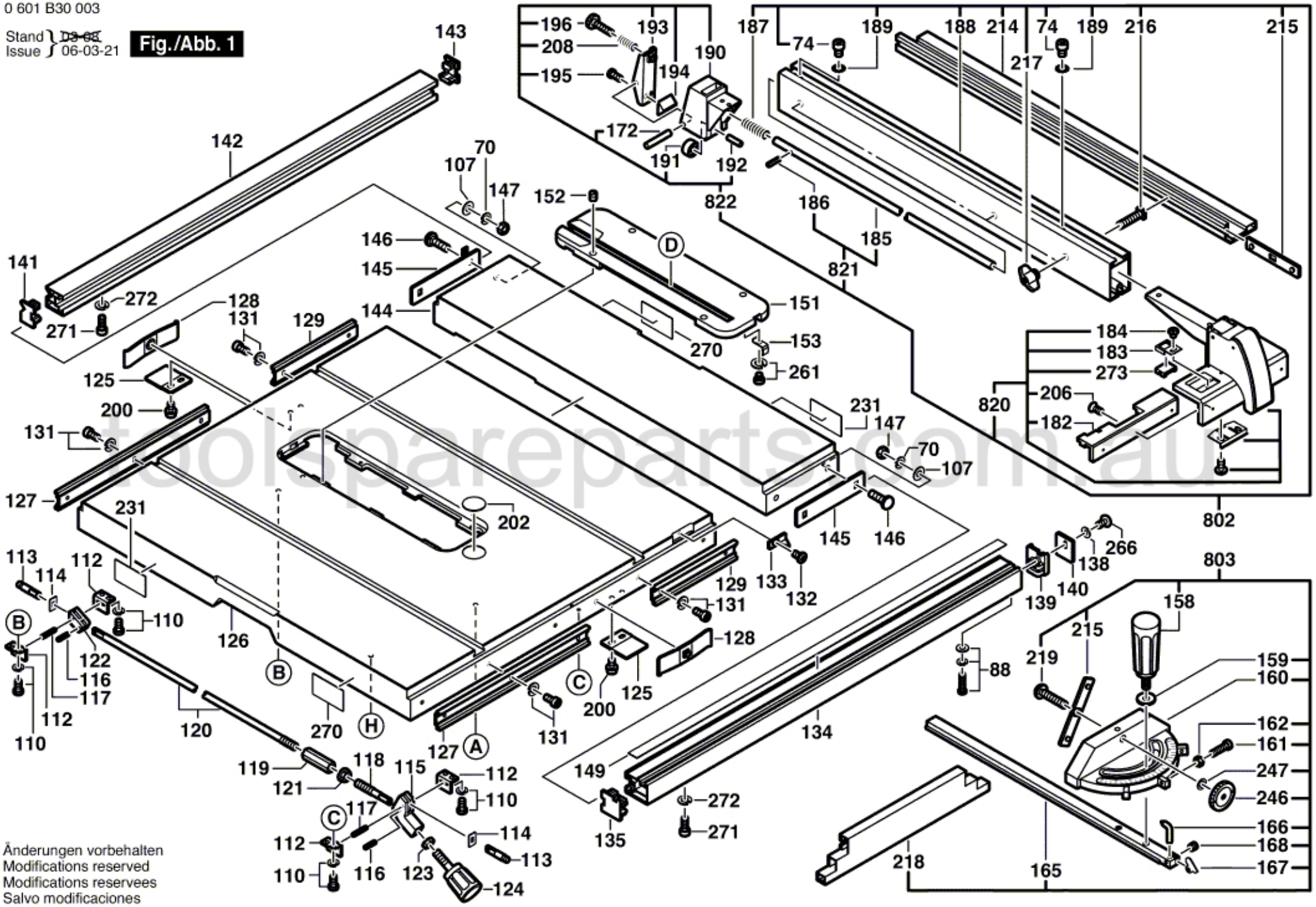

Änderungen vorbehalten
Modifications reserved
Modifications reservees
Salvo modificaciones

toolspareparts.com.au